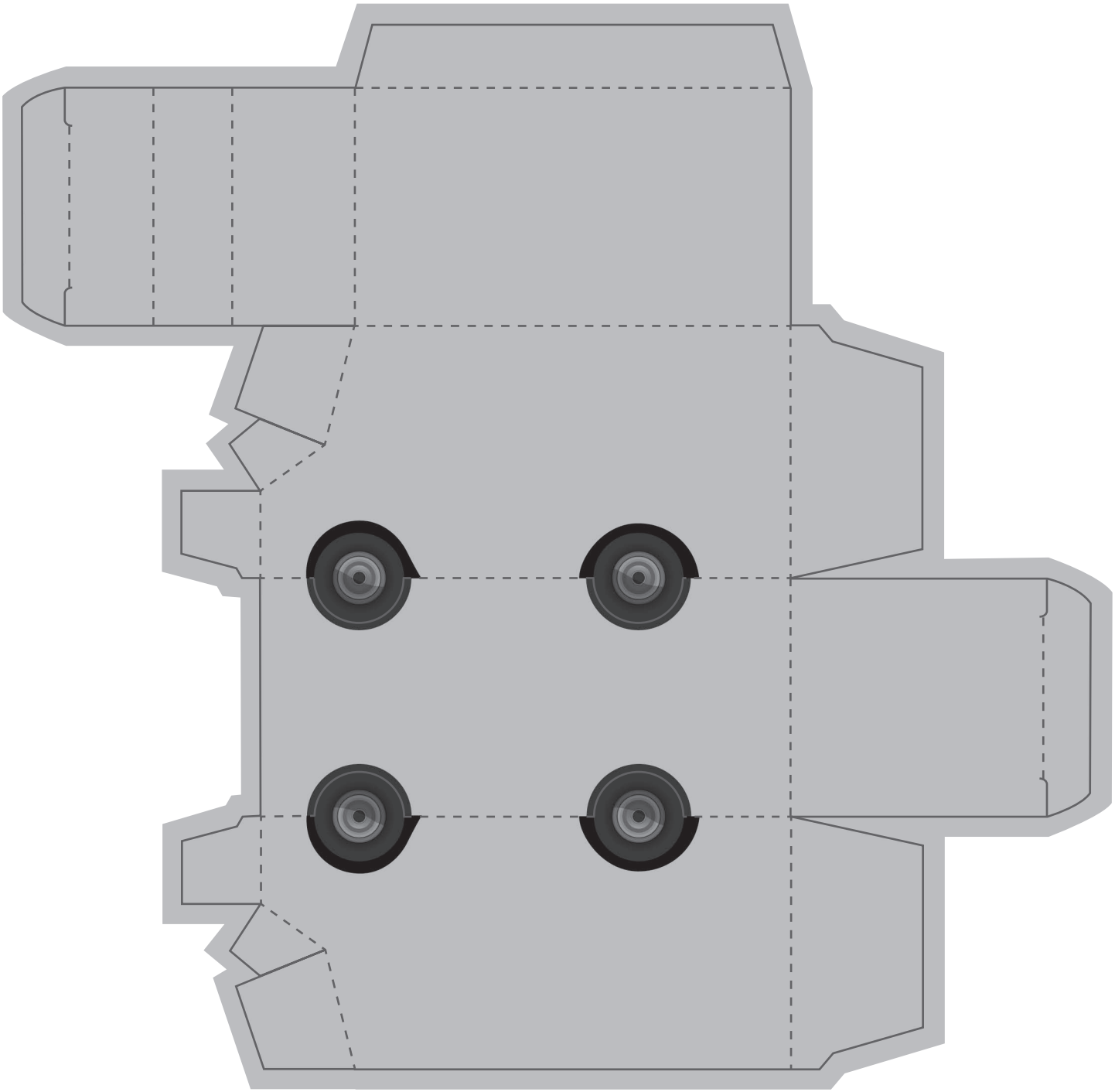AS
DESIGN FOR COMMUNICATION
AARON
SHIMER
aaronshimer.com